IR BASED 3D SCANNER WITH PRINTER

Ramal Maharjan
Department of Computer and Electronics
Kantipur Engineering College
Lalitpur, Nepal
maharjanramal1@gmail.com

Alex Maharjan
Department of Computer and Electronics
Kantipur Engineering College
Lalitpur, Nepal
mhrjanalex053@gmail.com

Sanish Dangol
Department of Computer and Electronics
Kantipur Engineering College
Lalitpur, Nepal
sanishdangols@gmail.com

Bikesh Maharjan
Department of Computer and Electronics
Kantipur Engineering College
Lalitpur, Nepal
bikesh2514@gmail.com

***Abstract*—IR based 3D (Three Dimensional) Scanner with printer is the low cost, product based research that focuses on three dimensional printing of scanned structure. Printing generally refers to making copies of text and images on any surface. When this printing procedure is slightly changed and made to develop a replica structure of any real world material then it is known as three dimensional printing (3D Printing). To develop a replica structure of any real world object it is necessary to have dimensional information of that object, therefore the machine we have developed extracts this information through scanning. Scanning is done in all three dimensions i.e. length, breadth and height of the object by using 3D Scanner. Scanner uses Infra-red sensor for measuring the dimension. The round trip time of IR signal helps to measure the distance which later gets converted into the dimensional quantity of the object. Three dimensional information obtained from scanner is plotted as point cloud which is reconstructed in the form of 3D image using MATLAB software. The constructed 3D image is exported from software in STL file format. STL file describes the surface geometry of three dimensional objects which is considered to be the input for 3D printer. Printing is based on additive manufacturing that means addition of material in layers to develop the replica of input STL file. The objective of the design is to construct a cost reduced three dimensional scanner with printer therefore, printed material may not be exact in all physical aspects but structure wise it recreates the scanned material.**

***Index Terms*—3D scanner, 3D printer, real world object, Infra-red sensor, Round trip time, STl file.**

I. Introduction

3D printing is exactly what it sounds like, printing something that can be picked up, held in our hands, and played with. Its printing because the 3D object doesn't just magically appear, it must be printed by a special device called a 3D printer. 3D printing, also known as additive manufacturing (AM), refers to processes used to create a three-dimensional object in which material is joined or solidified under computer control to create an object, with material being added together (such as liquid molecules or powder grains being fused together). In an additive process an object is created by laying down successive layers of material. Each of these layers can be seen as a thinly sliced horizontal cross-section of the eventual object. 3D printers have different printing mechanisms, Fused Deposition Modeling(FDM) is one them. In FDM, [1] thermoplastic material is being heated and extruded through extrusion head that deposits the molten plastic in X and Y coordinates, while the extrusion head is raised layer by layer in Z direction. Effectively the object is being built from bottom to up. 3D printing technology is mostly applicable for rapid prototyping purpose. Nowadays, rapid prototyping has a wide range of application in various fields of human activities such as research, engineering, medical industry, military, construction, architecture, fashion, education, the computer industry and many others [2]. 3D printing starts with the creation of a 3D model in our computer. A 3D model is either created from the ground up with 3D modeling software or based on data generated with a 3D scanner.

A 3D scanner is a device that analyses a real-world object or environment to collect data on its shape and possibly its appearance. The collected data can then be used to construct digital three- dimensional models. The purpose of a 3D scanner is usually to create point cloud of geometric samples on the surface of the subject. These points can then be used to extrapolate the shape of the subject (a process called reconstruction) [6]. If color information is collected at each point, then the colors on the surface of the subject can also be determined. This allows the three dimensional position of each point in the picture to be identified. The picture produced by a 3D scanner describes the distance to a surface at each point in the picture [7]. Many different approaches can be used to build these 3D scanning devices. A non-contact based active 3D sensing is the most popular approach adopted in 3D data acquirement. Non contact active scanning approach seems to be

commonly used approach because imaging system with an additional controlled light source seems more reliable [7]. 3D scanners share several traits with cameras. A camera collects color information about surfaces within its field of view, while a 3D scanner collects distance information about surfaces within its field of view [8].

3D scanning is much younger in the field of technology. Several approaches have been developed for improvement on 3D scanning technique. In this project the scanning process is based on time of flight active scanning approach. Here the object gets scanned simply by using infrared rays. IR rays acts as the probe to the surface of the subject in order to measure the distance, timing the round trip time of pulse of IR ray. The distance from the subject to the sensor gets converted into the co-ordinates along the entire axis. Multiple scans, even hundreds, from many different directions are usually required to obtain information about all sides of the subject. These scans have to be brought into a common reference system called alignment or registration, and then merged to create a complete model.

The project is a complete description of construction of low cost IR based 3D scanner and 3D printer along with its application. PLA filament has been used in this FDM based 3D Printer for printing. The printer has been constructed using stepper motors, extruders, timing belt and gears controlled by ATmega328p micro-controller along with some supporting materials. Printer requires digital 3D image which is obtained from the scanner. The scanner has also been constructed using motors and IR sensor that scans the object in all direction by rotating the object to be scanned using a special turn table. The scanned three dimensional information of the object is processed, converted into co-ordinate form and then presented on the screen where the complete image of the object is visualized from all directions. This digital data is obtained in the form of STL (Standard Triangle Language)file format from scanner. STL file is utilized by the rendering software to generate a special machine readable code called G-code. G-Code sent to the processor of the printer controls all the peripheral devices to operate in desired manner and finally the three Dimensional objects get synthesized. The printing device can print an object of 215mm X 215mm X 200mm dimension.

II. Literature Review

A. General History

The history of computer printers started in 1938 when Chester Carlson invented a dry printing process called electrophotography commonly called a Xerox. The original laser printer called EARS was developed at the Xerox Palo Alto Research Center beginning in 1969 and completed in November 1971. After then additive manufacturing equipment and materials were developed in the 1980s. In 1981, Hideo Kodama of Nagoya Municipal Industrial Research Institute [2] invented two additive methods for fabricating three-dimensional plastic models. In 1984, Chuck Hull [3] of 3D Systems Corporation filed his own patent for a stereolithography fabrication system. Hulls contribution was the STL file format and the digital slicing and infill strategies. The first 3D scanning technology was created in the 1960s. The early scanners used lights, cameras and projectors to perform this task. After 1985, they were replaced with scanners that could use white light, lasers and shadowing to capture a given surface. [8]

B. 3D Scanner

Three dimensional scanning has major two approaches contact and non contact scanning. Contact scanners are generally calibrated to operate on a fixed platform, often contain a probe located at the end of an articulated mechanical arm. The arm may be robotic or manually manipulated over the part's surface. As the probe contacts the object's surface the scanner records the X,Y,Z position of the probe by taking positional measurements of the armature. Non contact scanners do not make physical contact with object surface instead scanners rely on some active or passive techniques to scan an object. Active scanners emit some kind of radiation or light and detect its reflection in order to probe an object or environment. Passive scanners do not emit any kind of radiation themselves, but instead rely on detecting reflected ambient radiation [7]. The designed scanner in this project is based on Non-Contact active scanning approach. Infrared sensor has been used with time of flight scanning mechanism.

Laser scanning is one of the common non-contact active scanning procedure. It uses triangulation and phase shift mechanism for distance measurement. Laser scanners provide accurate and dense range data even for long ranges during scanning [7]. However, laser scanners are typically expensive and bulky. Infrared (IR) sensors have many practical merits for the external sensing. It provide a simple way to obtain information about the geometry of an object. The sharp contrast of IR rays and the IR proximity sensors contribute the 3D sensing easier and faster. Infrared sensors are well known for the distance/range measurement [9]. In 2013 SitiAsmah Daud [9] proposed an infrared sensor based scanning system which consisted five IR sensor rig arranged in pentagonal structure. The subject is placed at the center of Pentagonal sensor rig for measurement. Measured data was processed using MATLAB software for reconstruction of image. 3D

geometry reconstruction has been made using large infrared proximity array proposed by Akos Tar in 2009 [10]. The system used IR sensors and IR emitters to measure the distance and creates 3D mono-graphic geometry of the sensed objects in this system the LEDs and photo- transistors are used . The resolution of the objects heights, orientation and distance has been made very low but have a large sensing area of about 1m and it can be increased depending on the application. Another related example is 3D scanning system based on time of flight ranging sensor by Gutierrez-Villalobos Jose M [11] where the author has designed a scanning system using TOF ranging sensor to detect the surface shape and capture it in raw data. In the system, object that is to be digitized is placed on a spinning plate shaft-connected to the stepper motor shaft, such plate can is lifted from figure bottom to top. The plate is moved in a ratio of 200 steps per turn and each step represents 1.8 degree. TOF sensor measured the distance on each point of the object surface. Later, raw data are processed by a Matlab reconstruction algorithm, finally this reconstructed matrix is exported to a 3D image processor.

C. 3D Printer

3D printing is a manufacturing process. Basically manufacturing can be done using two mechanisms: additive manufacturing and subtractive manufacturing. For the understanding milling is the form of subtractive manufacturing method. Rather than take away from a model, a 3D printer adds mass to form a model which is additive manufacturing . 3D printers can be categorized into industrial 3D printers and desktop 3D printers. Desktop 3D printers are basically a small scale 3D printing technology which works in replicating rapid prototyping (Rep-Rap) mechanism. With regard to the RepRap project, in September 2006 an initial prototype of a RepRap printer printed a printer part for the first time. This part was then used to replace an already existing part of the prototype machine. In February 2008 the first RepRap V. 1.0 was ready and was named Darwin. In October 2009 RepRap V.2 was released and named Mendel. Mendel works by melting plastic filament via a heated extruder head, which is then used to build up 3-D objects. The plastic is deposited in layer by layer onto the printer bed until the 3-D component has been built (FDM) [4].

A modified version of Mendel, designed as 2nd generation Mendel (SDU Mendel) by Jakob Kentzer mentioned the operation of Rep-Rap 3D printer using polymer base (ABS filament). The system consists of extruder with heating element at its nozzle, motors, printer bed, and arduino for building the firmware with triangular mechanical design. The extruder is the most problematic part of the 3-D printer. Selection of polymer is another important part while designing Mendel [4]. The work has been extended to metal printing as well. In 2013, GERALD C. ANZALONE designed A Low-Cost Open-Source Metal 3-D Printer where low-cost commercial gas metal arc welder (GMAW) [5]. The system design was similar to Mendel but it was designed for metal printing, therefore instead of extruder and polymer filaments it used gas metal arc welder and steel. It used open source rendering software's and arduino for processing.

III. Methodology

A. Operation of 3D scanner

3D scanner consist of two stepper motors, high precision Sharp GP2Y0A51SK0F IR sensor, threaded and plane steel rods, memory card module and the Atmega328P microcontroller. The system is designed in such a way that scanning is carried from bottom to top therefore infrared sensor is made to slide from bottom to top with the help of threaded rod and stepper motor. Similarly for measuring distance value at each point of the object surface (object to be scanned), rotating table is designed. There is the prcised separation between sensor and the center of rotating table. The stepper motor rotates the table at a fixed angle of 1.8 degree with time delay of 250 milliseconds. During this time IR sensor collects multiple numbers of data for each angle for high precision.After complete rotation of turn table by 360 degrees, the IR sensor slides vertically by 1 millimeter. The process continues till it reaches the top. Collected data from IR sensor is in millivolts which is converted into distance in centimeter using the function:

$$d = 5.40274*(analogvalue)^2 + 28.4823*(analogvalue)^2 - 49.7115 * analogvalue + 31.3444incmlabeleq$$

Distance value is then stored in SD card.

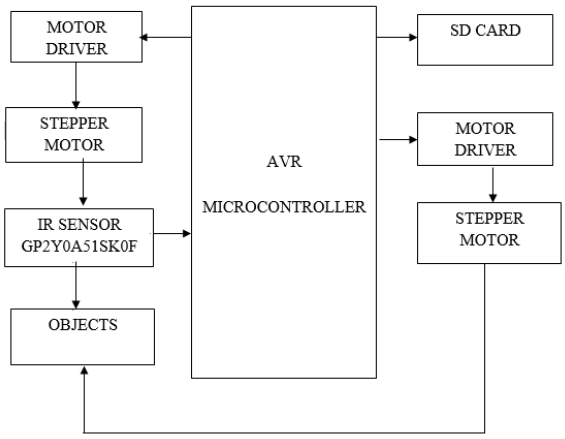

Fig. 1. Block diagram of scanner.

Fig. 2. 3D scanner.

B. Reconstruction of 3D image

The distance data are serially stored in the SD card in text format. As the scanning is made layer by layer, each layer data is separated by a code value 9999 indicating completion of data of a layer. This TXT file is loaded in MATLAB. The required initialization is made for indicating maximum height, threshold radius, window size etc. The serial distance data is then converted into radius matrix named r matrix with each row indicating distance data of single layer. The turn table is rotated at an angle 1.8 degree therefore each layer consists of 200 distance data. The distance data is then converted into distance from the center of the object by using distance = distance from center of table to sensor − distance measured. A row matrix of angle is constructed named as theta matrix whose value ranges from 0 to 360 degree at an increment of 1.8 degree. The matrix is repeated to make dimension equal to r matrix. Similarly a column matrix of height named Z matrix is constructed whose value ranges from 0 to maximum height of object scanned with increment of 0.1. Same repetition process is carried for equalizing the dimension. The matrices of radius, angle and height indicates the cylindrical co-ordinate system which is then converted to Cartesian co-ordinate system. Matrices now gets converted to matrices of X, Y and Z. Gaussian filter is used for smoothing of the data. The erroneous data is replaced by the data closer to it. Since top layer scanning is not possible in this system, the mean value of X and Y co-ordinate is taken to cover the top layer. The obtained matrices of X, Y and Z co-ordinates are then transferred to the function that generates STL file. The obtained STL file is visualized in the monitor.

C. Operation of 3D Printer

STL file is processed by the software named slicer that converts it into G-Code. G-code is a language in which computerized machine tools are instructed to operate in desired manner. The code specifies the motors where to move, how fast to move, and what path to follow. This code is then sent to print hosting software where it is processed in such a way that it instructs the processor of printer to operate accurately by maintaining the sequential execution of instruction.

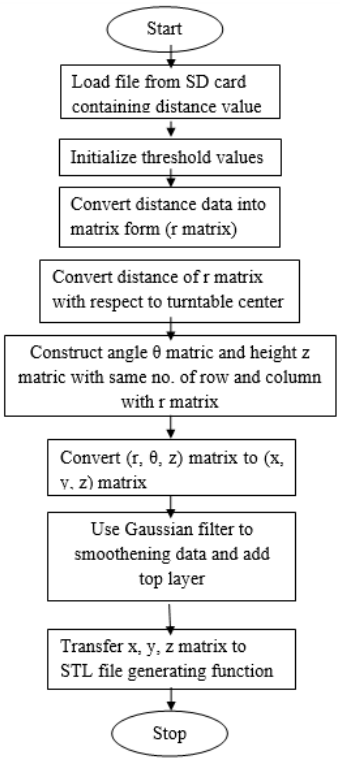

Fig. 3. Flow chart of matlab processing.

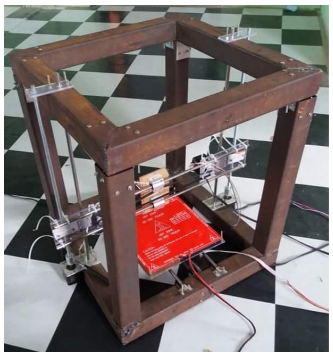

Fig. 4. Constructed 3D printer.

The printer has been constructed using stepper motors, Extruder, Heating element, limit switch, heat bed and polymer filament (PLA material). Three dimensional motion for printing is maintained using nema-17 stepper motors. X directional movement is maintained by sliding heat bed/print plate in horizontal direction. Similarly Y direction is maintained by sliding nozzle and Z direction maintained by vertical displacement of nozzle using stepper motors. Extruders are used for pulling up the PLA filament, melting it and liberating it through nozzle. Timing belts and steel rods with linear ball bearings has been used for mechanical sliding. Temperature maintenance, limit switch tripping

and controlling of motors has been maintained using Arduino mega. Heating element has been maintained at temperature of 180 to 205 degree Celsius for melting PLA filament. Mosfet switching is used for controlling the heating element.

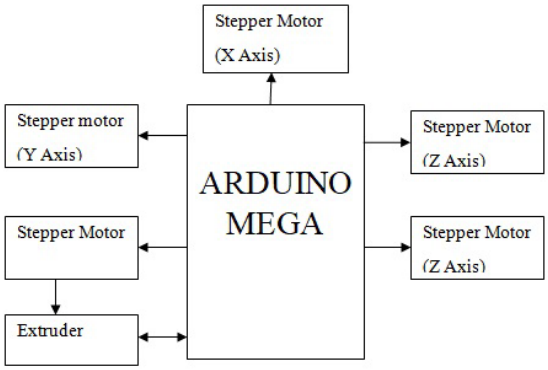

Fig. 5. 3D printer block diagram.

IV. Experimental output

The system comprises of IR based 3D scanner along with a 3D printer. Both the products are low cost designs using simple electronics. It is capable of acquiring digital 3D image of the subject that has been scanned and print it in three dimension. 3D scanner delivers the 3D image in the form of STL file that can be visualized on the screen using 3D image viewing tool. The scanned data after processing through MATLAB, can also be displayed in the form of point cloud before converting it into STL format. The scanning and printing process has not been made simultaneous due to the processing complexity therefore, scanning has to be completed in order to receive STL file of the subject before printing.

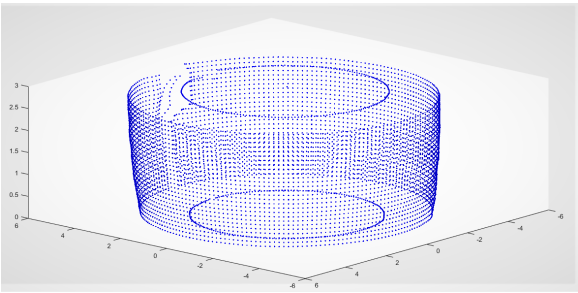

Fig. 6. Point cloud of scanned object.

Printing process is carried out after passing the STL file into a slicer software where the G-code for the given 3D image is received and the G-code is then fed to print hosting software for initiating printing. The resolution of print can be adjusted from the print hosting software for the desired print output. The final output is the actual model of the scanned subject made from the PLA polymer.

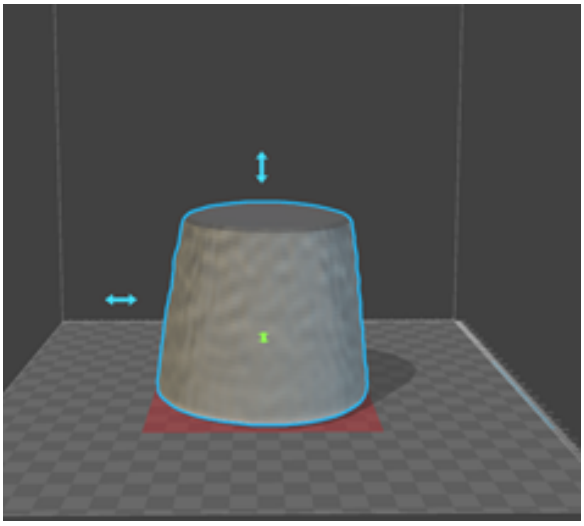

Fig. 7. STL format 3D image after scanning.

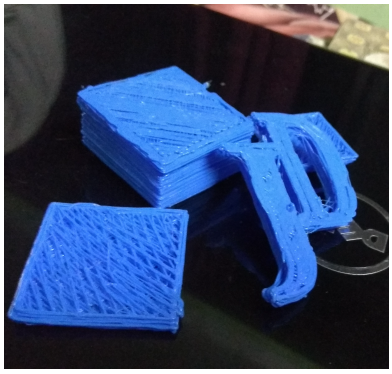

Fig. 8. Printed components.

V. Limitations

- Low precision while scanning transparent, mirror objects.
- Scanner is unable to scan top and bottom surface.
- Distance of the subject from IR sensor must not be greater than 15 cm.
- During object printing, the free space inclined printing must not be greater than 45 degrees.

VI. Discussion

The 3D technology is one of the recent and growing developments of the present world. This technology is being more popular in industrial, medical and entertainment fields. The system that we have designed is a low cost scanner that has the capability to scan the real world object using IR rays based on round its round trip time. The three dimensional information which is in form of STL file is printed using the melted PLA filament. The system is designed for a low cost scanning and printing purpose which can be further enhanced using different other printing material and advanced electronics. The system is constructed using simple electronics and mechanical parts which has reduced

the cost of product by almost 50 percent to that of the products available in the market these days. Simultaneous scanning and printing could be the improvement to this system that reduces operating time, Wireless 3D data transferring using Bluetooth, WI-FI or any other means to the printer so that printing can be carried out from different locations, Multiple Filament discharge from multiple nozzles in order to manufacture the object with color variation and Making the printer to closed loop system so that the system can operate autonomously could be the possible enhancement to this system.

VII. Conclusion

The project is about the development of an low cost embedded system named IR based 3D scanner with Printer. The system has great applications in rapid prototyping, educations, medicines and industrial manufacturing. Varities of scanners and printers are available in market these days and are costly too. The system that we have designed has focused on the construction of similar type of scanner and printer but reducing the exorbitant cost. The system consists of major two components scanner and the printer. The 3D output of scanner becomes the input for printer. Sharp GP2Y0A51SK0F infrared high prcised sensor has been used for distance measurement with high accuracy in scanner design. The scanning process is quite time consuming but will produce the data with greater accuracy and desktop 3D printing is done in FDM approach. The system is developed by utilizing basic electronic and mechanical components by enhancing these system components and adding some features it can be developed as the product for industrial use as well.

Acknowledgment

The author would like to thank Department of Electronics and communication, Kantipur Engineering College, Head of Department .Er.Rabindra Khati, project supervisor Prof. Dr. Dinesh.k.sharma for the support, encouragement and facilities.

References

[1] Sachini Wickramasinghe, Truong Do, and Phuong Tran " FDM-Based 3D Printing of Polymer and Associated Composite: A Review on Mechanical Properties, Defects and Treatments" RMIT University, Melbourne, 10 July 2020.

[2] Vinod G. Gokhare, Dr. D. N. Raut, and Dr. D. K. Shinde "A Review paper on 3D-Printing Aspects and Various Processes Used in the 3D-Printing", Veermata Jijabai Technological Institute,Mumbai,India,Vol. 6, 06, June - 2017.

[3] P. Holzmann, J. Robert, A. Aqeel Breitenecker, Soomro, and J. S. Erich, User entrepreneur business models in 3D printing, Journal of Manufacturing Technology Management, Vol. 28, No. 1, pp. 75-94, 2017.

[4] Jakob Kentzer, Bjarke Koch, Michael Thiim, Richard W. Jones and Egon Villumsen," An Open Source Hardware based Mechatronics Project: The Replicating Rapid 3-D Printer", Mads Clausen Institute for Product Innovation Southern Denmark University, Sonderborg, Denmark, 19 May 2011.

[5] Gerald C. Anzalone, Chenlong Zhang, Bas Wijen, Paul G. Sanders and Joushua M. Pearce, "A Low-Cost Open Source Metal 3-D Printer", Department of Materials Science and Engineering, Michigan Technological University, Houghton,USA, December 9, 2013.

[6] Mahesh Parde, Karan Khankal, Thotya S.,R.S. MESHRAM, "Implementation of 3D Scanner Using IR Distance Sensor" ELECTRONIC AND TELECOMMUNICATION KGCE KARJAT, INDIA, Vol-4,feb-2018.

[7] Mostafa Abdel-Bary EBRAHIM, "3D Laser Scanners Techniques Overview", AbdulAziz University, Kingdom of Saudi Arabia, IJSR, 2014.

[8] Mostafa A-B Ebrahim, "3D LASER SCANNERS: HISTORY, ,, APPLICATIONS, AND FUTURE", Assiut University, Kingdom of Saudi Arabia, October 2011.

[9] SitiAsmah Daud, NasrulHumaimi Mahmood, Pei Ling Leow, FauzanKhairiChe Harun, "Infrared Sensor Rig in Detecting Various Object Shapes" International Journal of Advanced Research in Electrical, Electronics and Instrumentation Engineering, Vol. 2, 10, October 2013

[10] Akos Tar, Miklos Koller, Gyorgy Cserey, "3D Geometry Reconstruction using Large Infrared Proximity Array for Robotic Applications", Pazmany Peter Catholic University, Budapest, Hungary, April 2009

[11] Yan Cui, Sebastian Schuon, Derek Chan, Sebastian Thrun, Christian Theobalt, "3D Shape Scanning with Time-of-Flight Camera", MPI Informatik, 2010.